CA-1126

PART NUMBER	UNLESS OTHERWISE SHOWN, COMMON FRACTIONS ± .010	MATERIAL: — MILL TOLERANCE DECIMAL FRACTIONS ± .003	WIDTH OF STRIP	BLANK SIZE	WGT. PER M	FINISH ZINC PLATE	CUSTOMER	NO.
CA-1126								

H

ITEM NO.	PART NUMBER	DESCRIPTION	QTY
1	CA-1126-1	SHELL	1
2	1006	GASKET	1
3	CA-117-3	SPRING	1

J1

SCANNED
JUL 01 1998

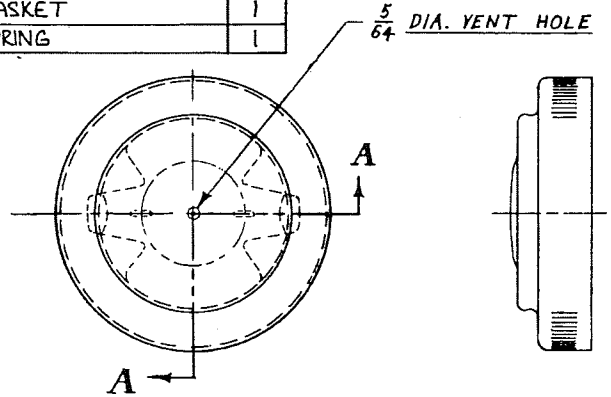

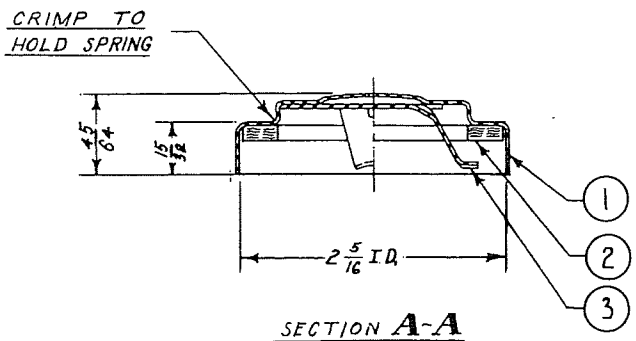

SECTION A-A

CH. NO.	LET	REVISIONS	DATE
6405-2	J1	RELOCATED BILL OF MAT'L	7-15-85
	H	FINISH ADDED	5-7-62
6440	G	REMOVED 1195 & REDRAWN	11-18-53

EATON MANUFACTURING COMPANY
STAMPING DIVISION CLEVELAND, OHIO

PART NAME CAP ASS'Y
MAT'L SEE DETAILS
SPEC.
DR. V.G.C. CH. TR. PREVITE CH.
SCALE FULL DATE 11-5-53 APPRV'D
EXP'L OR OTHER NUMBER
PART NUMBER CA-1126

OPER.	CADMIUM PLATE	POLISH	NICKEL PLATE	NICKEL BUFF	CHROME PLATE
SQ. IN.					